SHARP COLOUR TELEVISION MOD

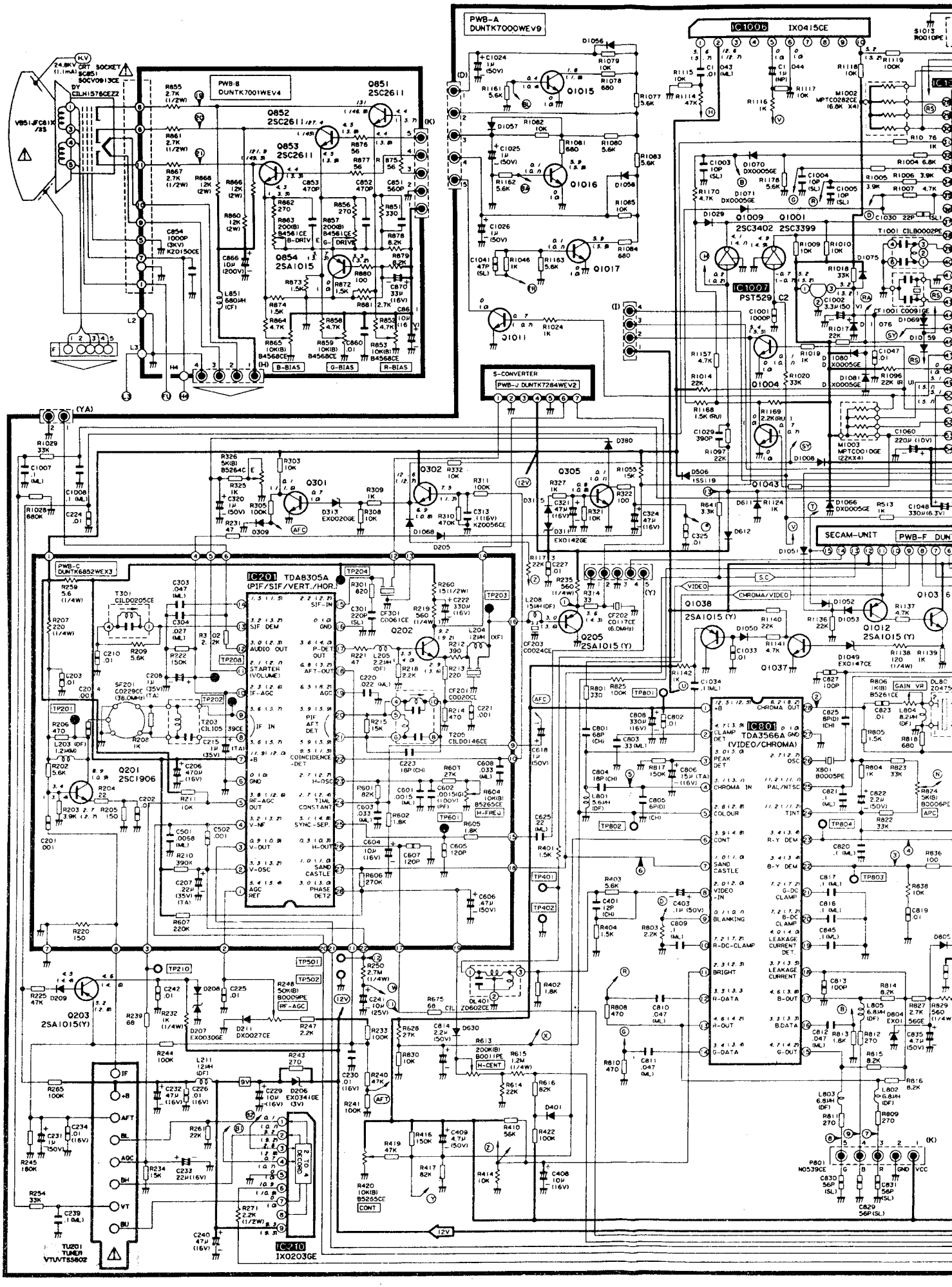

MODEL SV-2152CK1 SCHEMATIC DIAGRAM

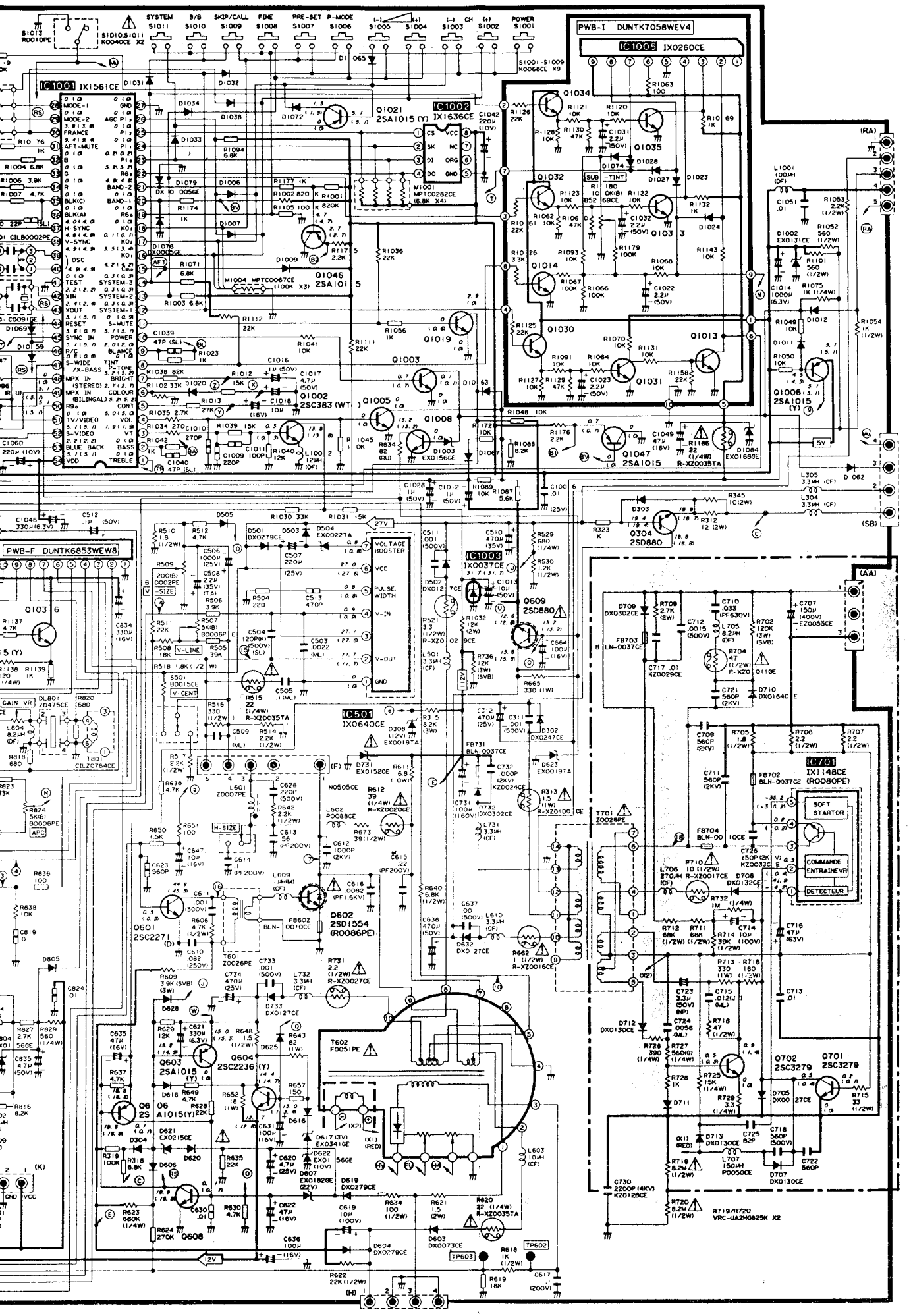

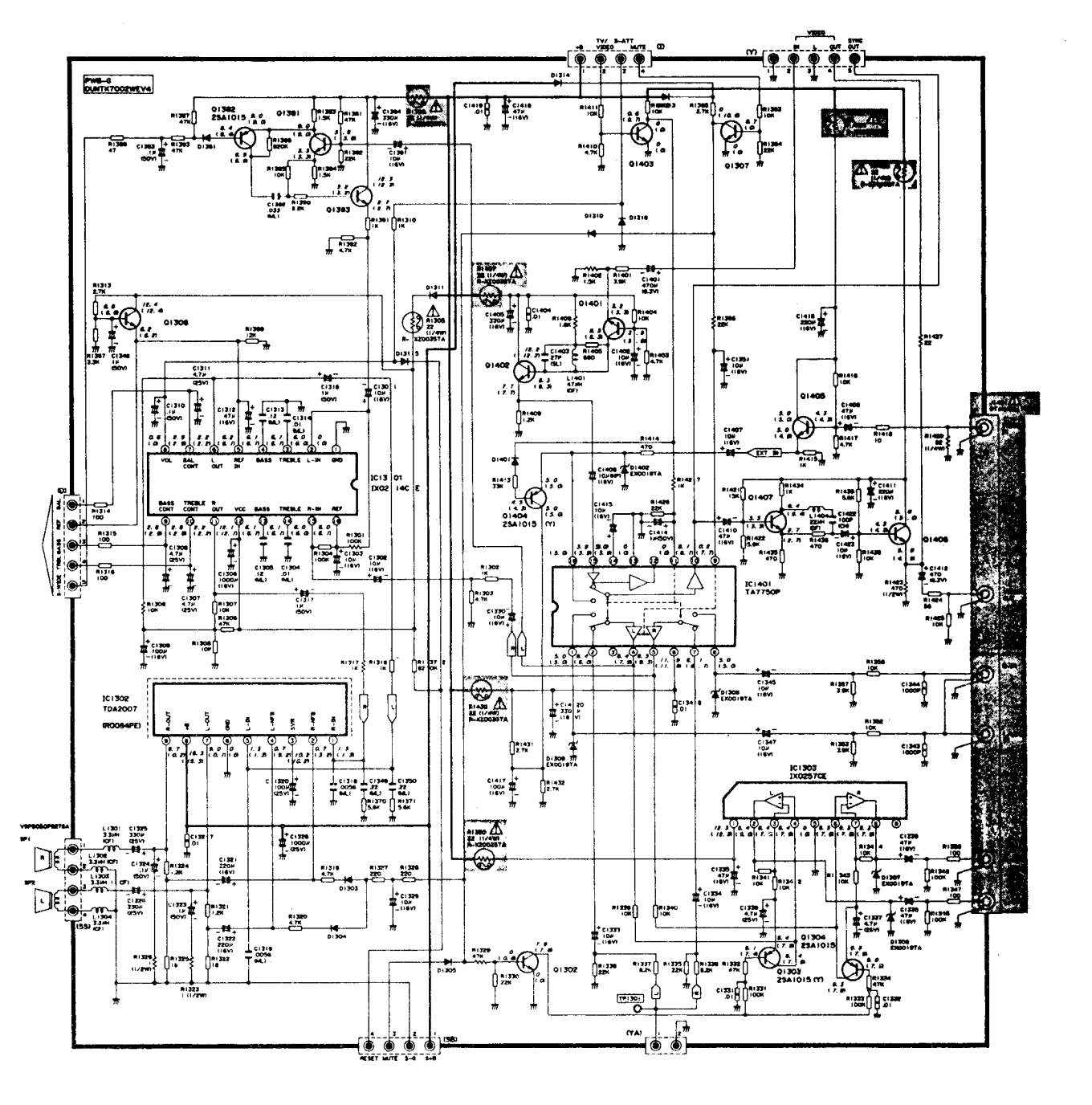
PWB-G
DAWTKT002WEY4
Q1382
2SA1015
Q1381
Q1383
Q1306
Q1401
Q1402
Q1404
2SA1015
Q1403
Q1307
Q1405
Q1407
Q1408
IC1301
IX02 14C E
IC1401
TA7750P
IC1302
TDA2007
(R0084PE)
IC1303
IX0257CE
Q1304
2SA1015
Q1303
2SA1015 (Y)
Q1302
TV/ S-ATT VIDEO MUTE
VIDEO SYNC OUT
EXT IN
RESET MUTE S-6 S-8

S-CONVERTER

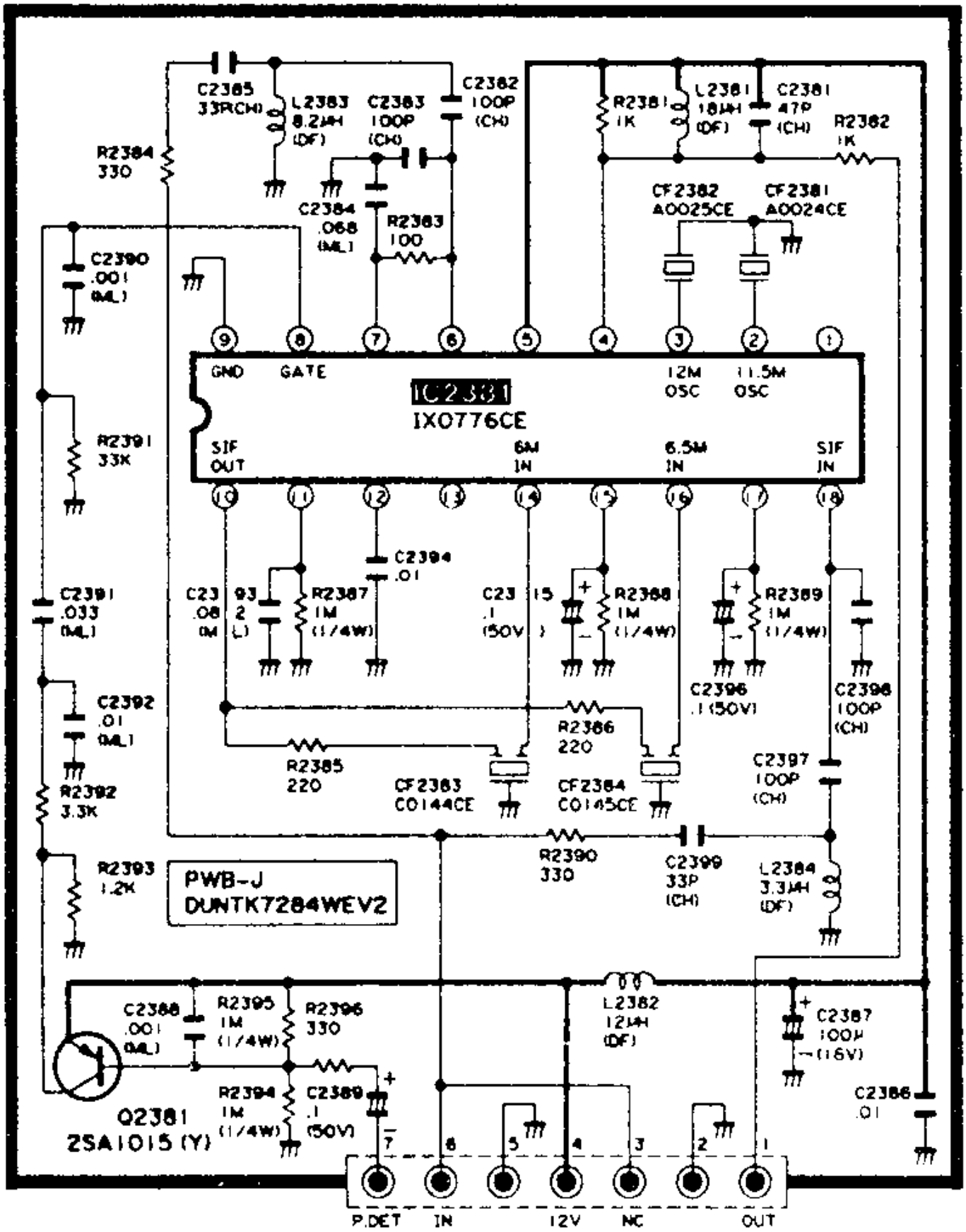
C2385
33P(CH)
L2383
8.2μH
(DF)
C2383
100P
(CH)
C2382
100P
(CH)
R2381
1K
L2381
18μH
(DF)
C2381
47P
(CH)
R2382
1K
R2384
330
C2384
.068
(ML)
R2383
100
CF2382
A0025CE
CF2381
A0024CE
C2390
.001
(ML)
GND
GATE
IC2331
IX0776CE
12M
OSC
11.5M
OSC
R2391
33K
SIF
OUT
6M
IN
6.5M
IN
SIF
IN
C2394
.01
C2391
.033
(ML)
R2387
1M
(1/4W)
R2388
1M
(1/4W)
R2389
1M
(1/4W)
C2396
.1(50V)
C2398
100P
(CH)
C2392
.01
(ML)
R2386
220
R2385
220
CF2383
C0144CE
CF2384
C0145CE
C2397
100P
(CH)
R2392
3.3K
R2390
330
C2399
33P
(CH)
L2384
3.3μH
(DF)
R2393
1.2K
PWB-J
DUNTK7284WEV2
L2382
12μH
(DF)
C2388
.001
(ML)
R2395
1M
(1/4W)
R2396
330
C2387
100μ
(16V)
R2394
1M
(1/4W)
C2389
.1
(50V)
C2386
.01
Q2381
2SA1015 (Y)
P.DET
IN
12V
NC
OUT

POWER

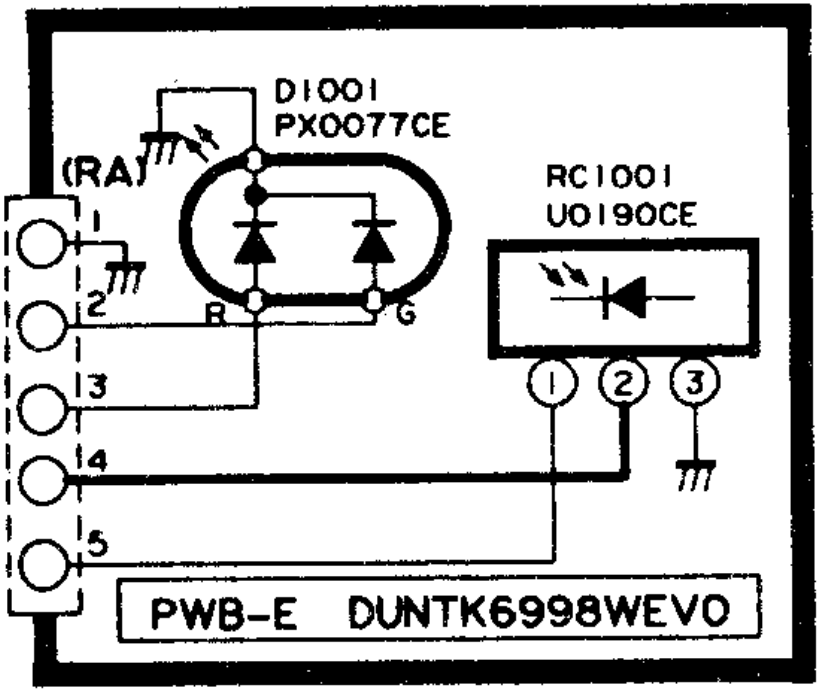
D1001
PX0077CE
(RA)
RC1001
U0190CE
1
2
3
4
5
R
G
PWB-E DUNTK6998WEVO

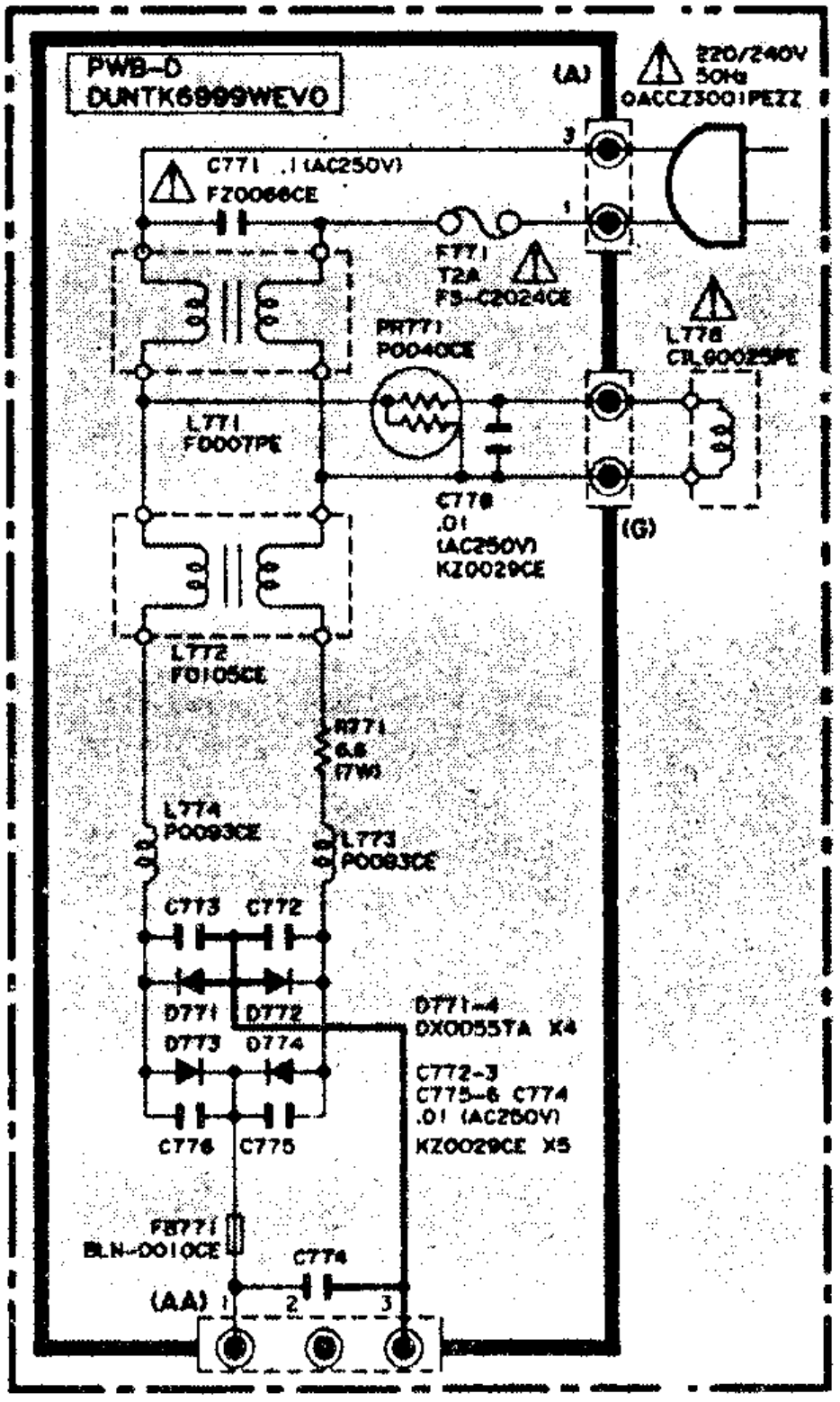
PWB-D
DUNTK6999WEVO
(A)
220/240V
50Hz
QACCZ3001PEZZ
C771 .1 (AC250V)
FZ0066CE
F771
T2A
FS-C2024CE
PR771
P0040CE
L778
CIL0025PE
L771
FD007PE
C778
.01
(AC250V)
KZ0029CE
(G)
L772
FD105CE
R771
6.8
(7W)
L774
P0093CE
L773
P0093CE
C773
C772
D771
D772
D773
D774
D771-4
DX0055TA X4
C772-3
C775-6 C774
.01 (AC250V)
KZ0029CE X5
C776
C775
FB771
BLN-D010CE
C774
(AA)

SECAM

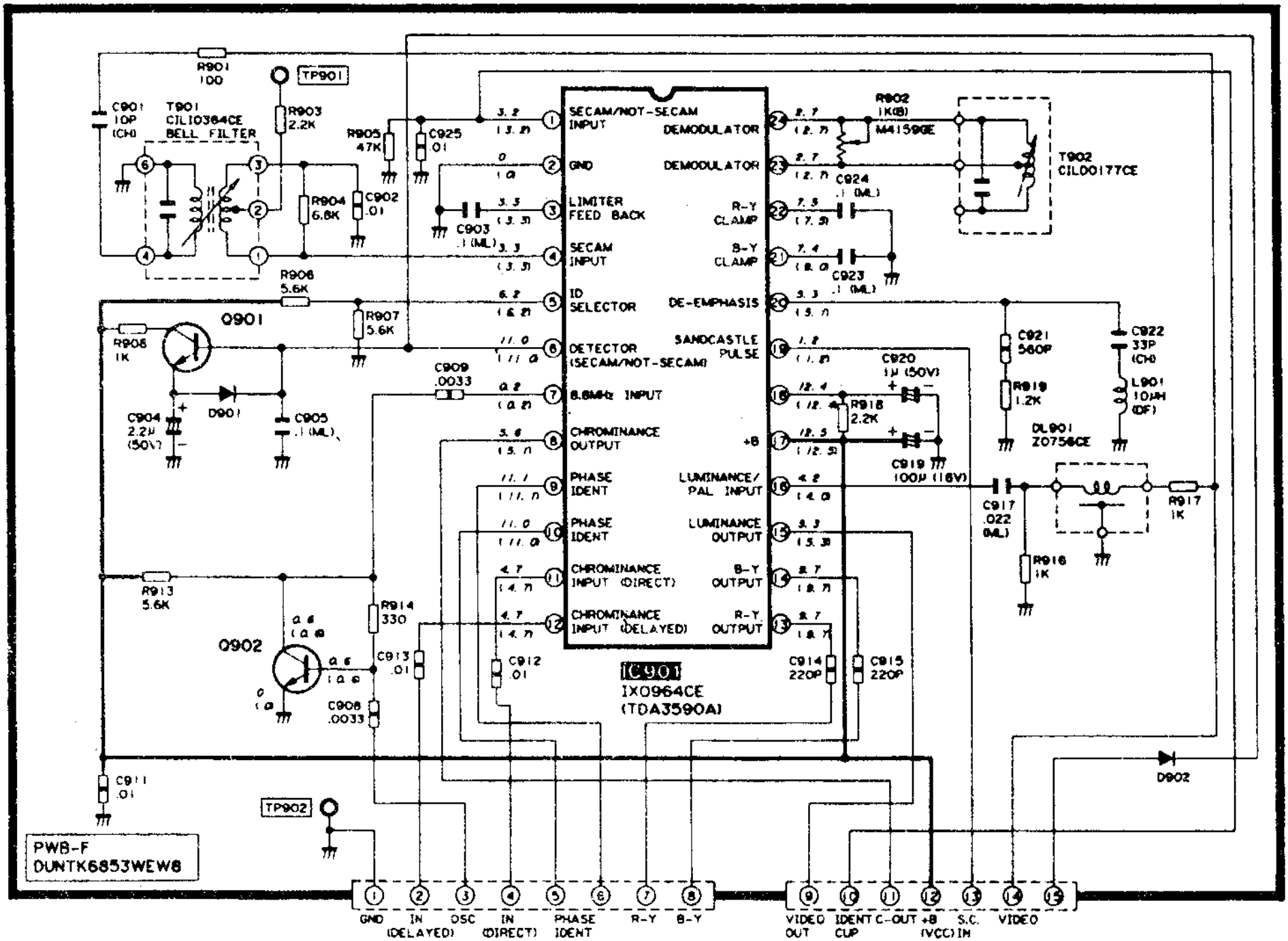
R901 100
TP901
C901 10P (CH)
T901 CILI0364CE BELL FILTER
R903 2.2K
R905 47K
C925 .01
R904 6.8K
C902 .01
C903 .1 (ML)
R906 5.6K
R907 5.6K
Q901
R908 1K
D901
C904 2.2μ (50V)
C905 .1 (ML)
C909 .0033
R913 5.6K
Q902
R914 330
C913 .01
C908 .0033
C911 .01
TP902
PWB-F
DUNTK6853WEW8
SECAM/NOT-SECAM INPUT
GND
LIMITER FEED BACK
SECAM INPUT
ID SELECTOR
DETECTOR (SECAM/NOT-SECAM)
8.86MHz INPUT
CHROMINANCE OUTPUT
PHASE IDENT
PHASE IDENT
CHROMINANCE INPUT (DIRECT)
CHROMINANCE INPUT (DELAYED)
DEMODULATOR
DEMODULATOR
R-Y CLAMP
B-Y CLAMP
DE-EMPHASIS
SANDCASTLE PULSE
+B
LUMINANCE/ PAL INPUT
LUMINANCE OUTPUT
B-Y OUTPUT
R-Y OUTPUT
IC901
IX0964CE
(TDA3590A)
C912 .01
C914 220P
C915 220P
R902 1K(B)
M41590E
T902 CILD0177CE
C924 .1 (ML)
C923 .1 (ML)
C920 1μ (50V)
R918 2.2K
C919 100μ (16V)
C921 560P
R919 1.2K
C922 33P (CH)
L901 10μH (DF)
DL901 ZD756CE
C917 .022 (ML)
R916 1K
R917 1K
D902
GND
IN (DELAYED)
OSC
IN (DIRECT)
PHASE IDENT
R-Y
B-Y
VIDEO OUT
IDENT CUP
C-OUT
+B (VCC)
S.C. IN
VIDEO